Enex Kina - Geothermal Heating

Nordic-Chinese Energy & Climate Day

Nordic council of ministers
June 2010

enex
KÍNA

Sino-Icelandic cooperation

Academic

- UNU program
- University of Iceland

Business

- Consulting
- Investing

Enex China - Technology

Distirct Heating Network

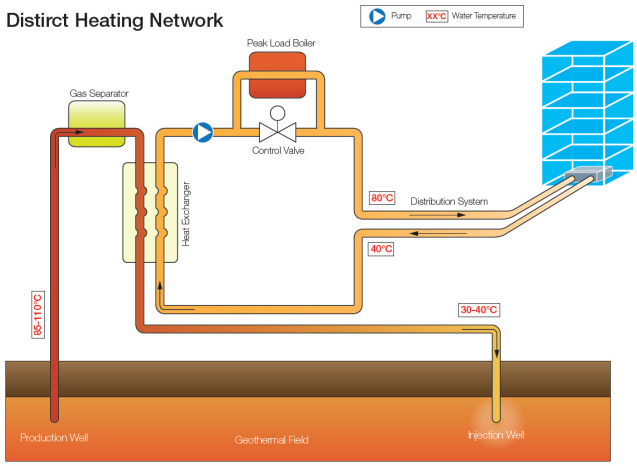

District Cooling Network

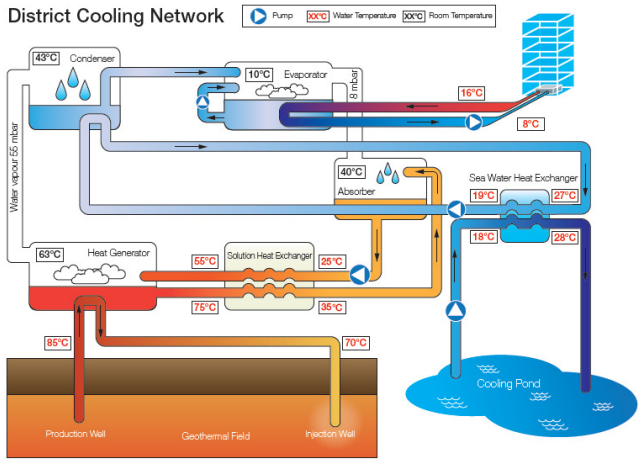

Organic Rankine Cycle

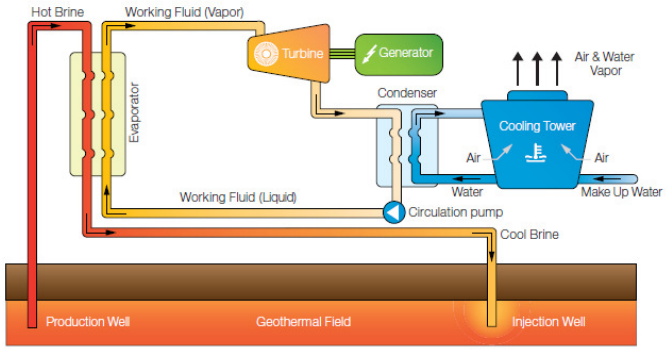

Flash Cycle

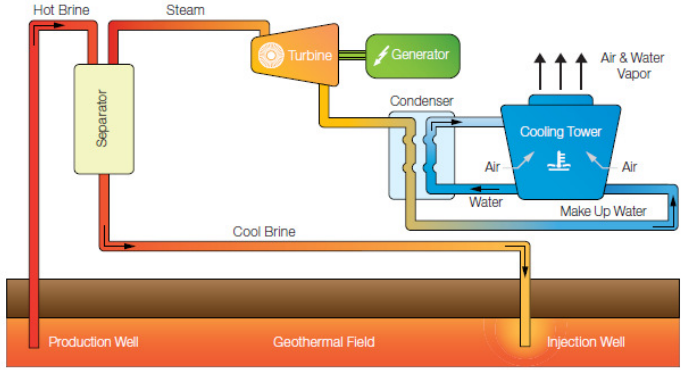

Enex China - Company overview

Enex China joint venture geothermal heating operation

Development and operation of geothermal district heating ("DH") systems in China.

Operated by Shaanxi Green Energy, a JV between Enex China (49%) and Sinopec Star (51%).

Current operations:

- 1.5 million square meters of heated housing
- Approx. 140 MW_{th} peak-load capacity
- Implementation of CERs* underway

Future development:

- Extensive growth opportunities in Xianyang, Baoding, Xiong County, Shandong and elsewhere in China.

Drilling rig in action for the Xianyangproject

SGE's Geothermal DH Plant

*CERs = U.N. Certified Emission Reductions, also known as Carbon Credits

Enex China operations

Development in Shaanxi province

Geothermal DH heating system in Xianyang city, (pop. 4.8 million), Shaanxi Province near Xi'an city.

Current operations:

- 1.2 million square meters of heated housing
- 70 MW_{th} (110 MW_{th} peak-load)
- 7 heat centrals, 11 geothermal wells
- Heating capacity planned to reach 3 million square meters in 2012
- Implementation of CERs* underway. The operation reduces CO_2 emissions by over a 100,000 tons annually

Map of China and Shaanxi Province

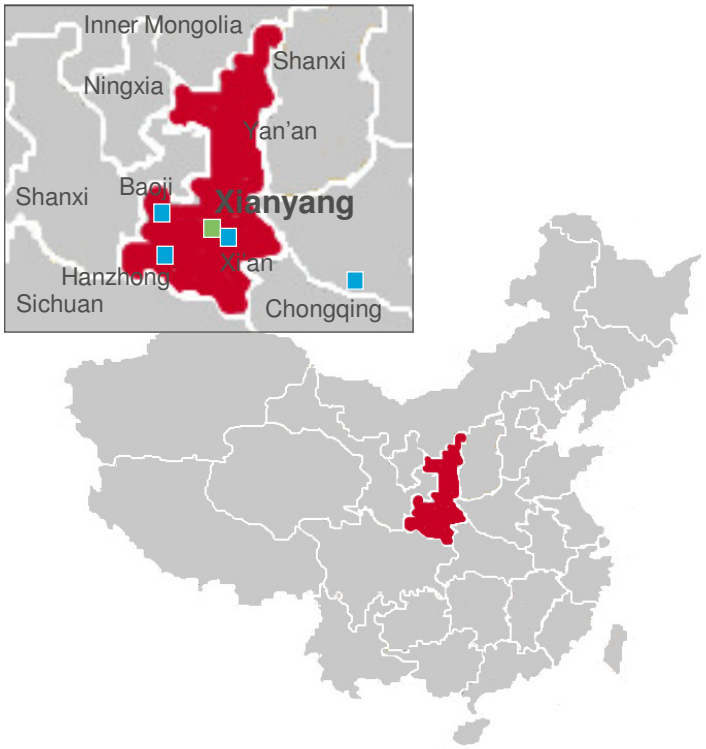

*CERs = U.N. Certified Emission Reductions, also known as Carbon Credits

Enex China operations

Development in Hebei province

·Geothermal DH heating system in Xiong county, Baoding city, (pop. 354,000), close to Beijing and Tianjin.

Local government supports geothermal heating and aims for a “city of no-dust” by 2015.

- Well depth 500-1,500 meters
- Geothermal water temp. 55-86° C

Geothermal heating coverage in operation:

- 300,000 square meters in operation
- 1 million square meters in 2010
- 3 million square meters by 2012

Map of China and Hebei Province

Chinese Partner – Sinopec

Sinopec Group

- Largest energy company in China, covering oil exploration and refinery, petroleum retail and petro-chemicals
- 2008 group revenue US$208b, profit US$1,961m
- Ranked #9 on 2009 Fortune top 500 global companies

Sinopec Star Petroleum

- 1st tier subsidiary of Sinopec Group
- Annual sales US$1,000m
- The exclusive arm of Sinopec Group to develop geothermal energy

Sinopec role

- A strong JV partner required by local regulations – foreign shareholding capped by 49%
- Leverage on Sinopec's political influence and power to deal with local government
- Leverage on Sinopec's knowledge on local geology and drilling experience in China

中国石油化工股份有限公司
CHINA PETROLEUM & CHEMICAL CORPORATION

Near term plan

- **Near-term plan (2010-2013)**
  - Develop approx.20m sq.m heating coverage across China by 2013, performance qualifying IPO in 2012
  - Seek opportunities of other geothermal projects (i.e. cooling and power generation)
  - Become the largest geothermal semi-utility operator in greater China

GREE

enex

KÍNA